1. INPUT & x2 PREAMP (U1A)

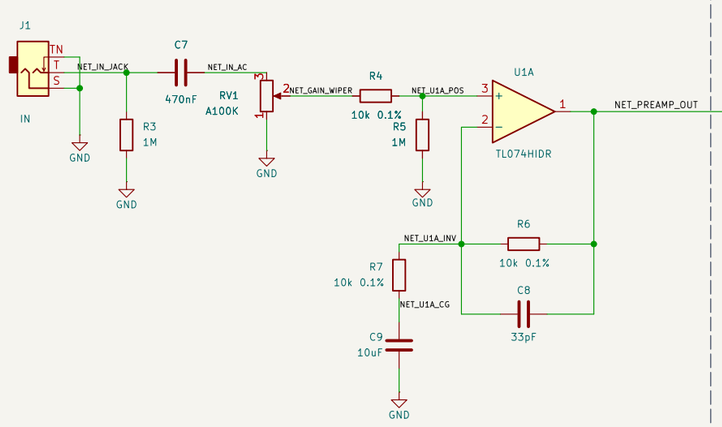

2. PRECISION FULL-WAVE RECTIFIER (U1B, U1C, D3)

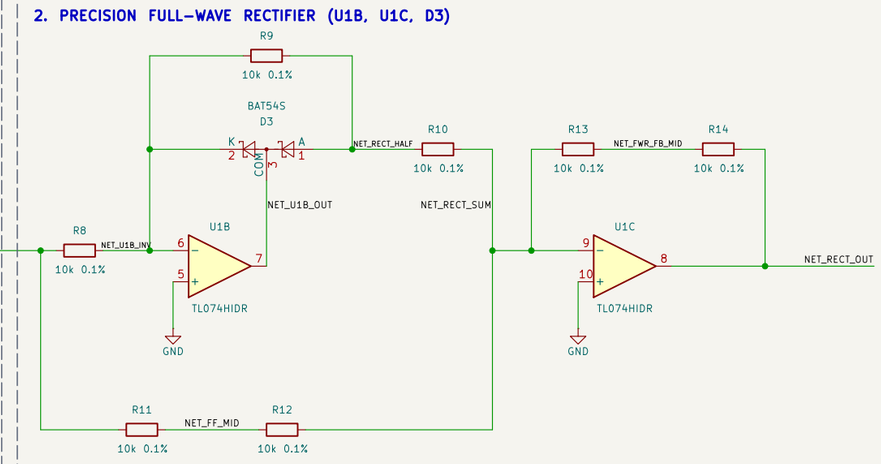

3. POWER SUPPLY & IC DECOUPLING (J_PWR, U1E, U2E)

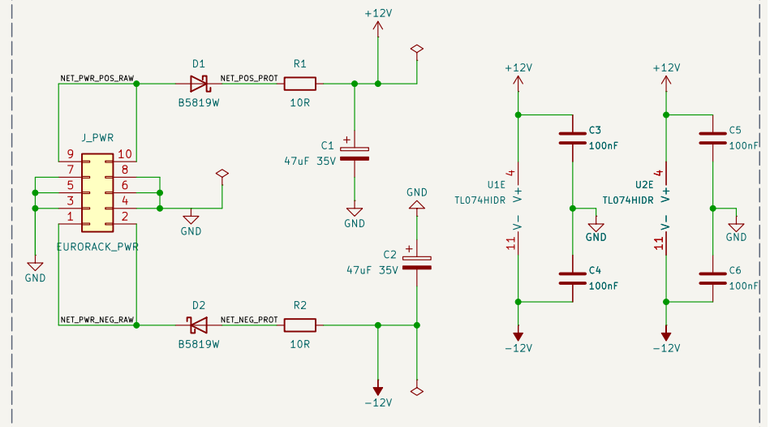

4. SLEW IN & ACTIVE SKEW LIMITER (J2, U1D, D4/D5, RV2/RV3, SW2, U2A)

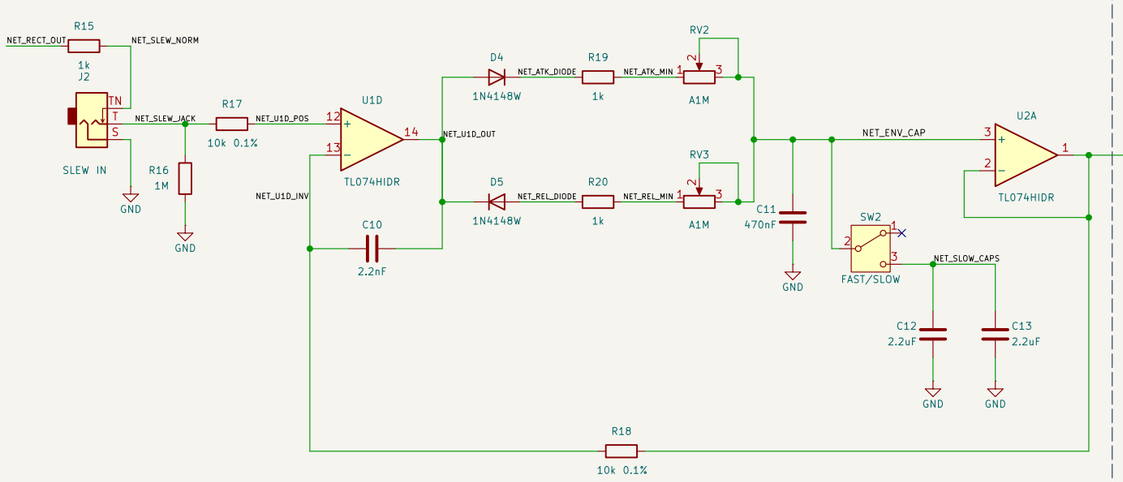

5. SMOOTH T-FILTER (SW1)

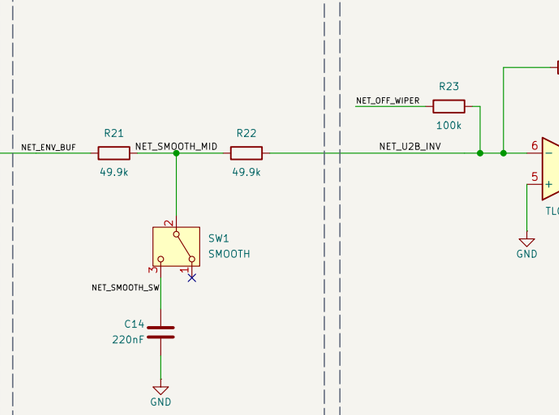

6. OUTPUT SUMMER (U2B) & UNITY INVERTER (U2C)

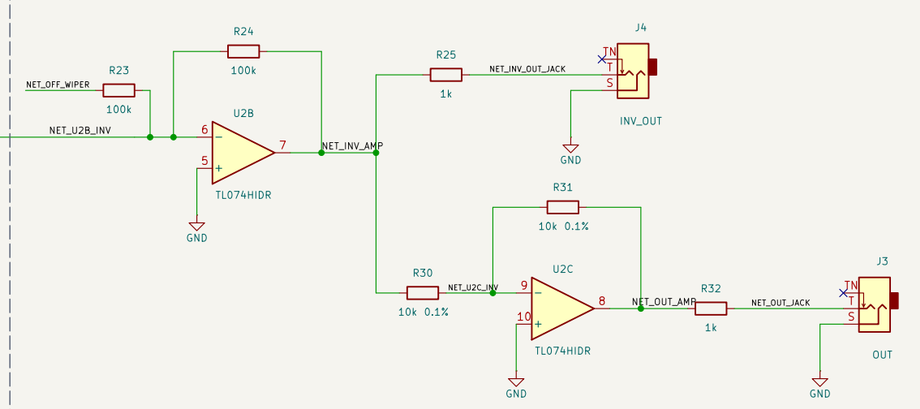

7. RC-FILTERED OFFSET BIAS (RV4)

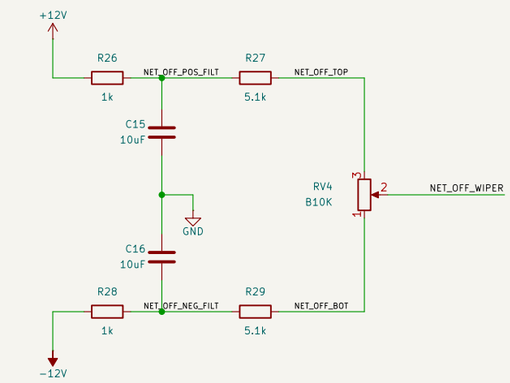

8. ACTIVE BI-COLOR LED DRIVER (U2D)

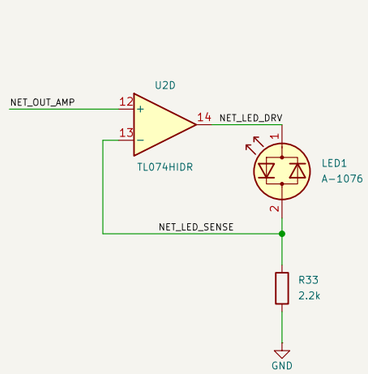

9. DNP TEST POINTS (TP1-TP12, B.Cu, RH-5001)

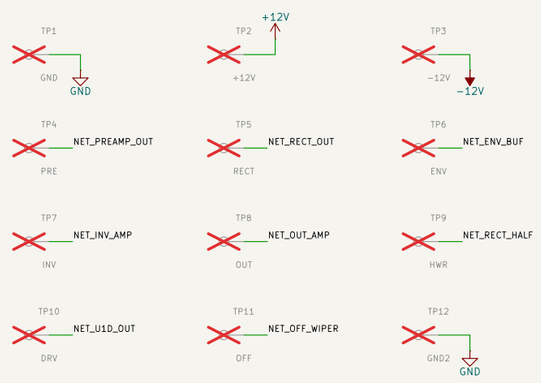

Generated from SKiDL circuit definition in envelope_follower.py
2x TL074HIDR | 50 SMD (3 Extended SKUs) + 18 THT + 12 DNP TPs

EnvelopeFollowerWithSkewLimiter

Sheet: /
File: envelope_follower.kicad_sch

Title: Envelope Follower with Skew Limiter (6 HP Eurorack)

Size: A3	Date: 2026-11-22	**Rev: 1.0**
KiCad E.D.A. 10.0.1		Id: 1/1